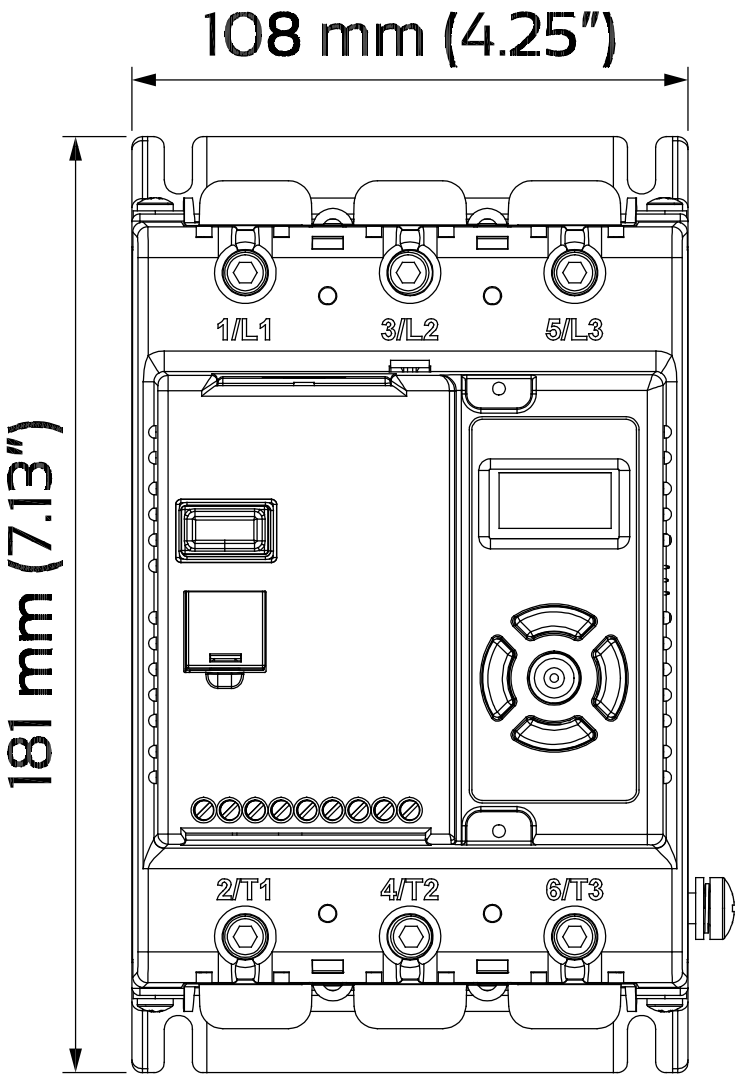
108 mm (4.25")
181 mm (7.13")
1/L1
3/L2
5/L3
2/T1
4/T2
6/T3

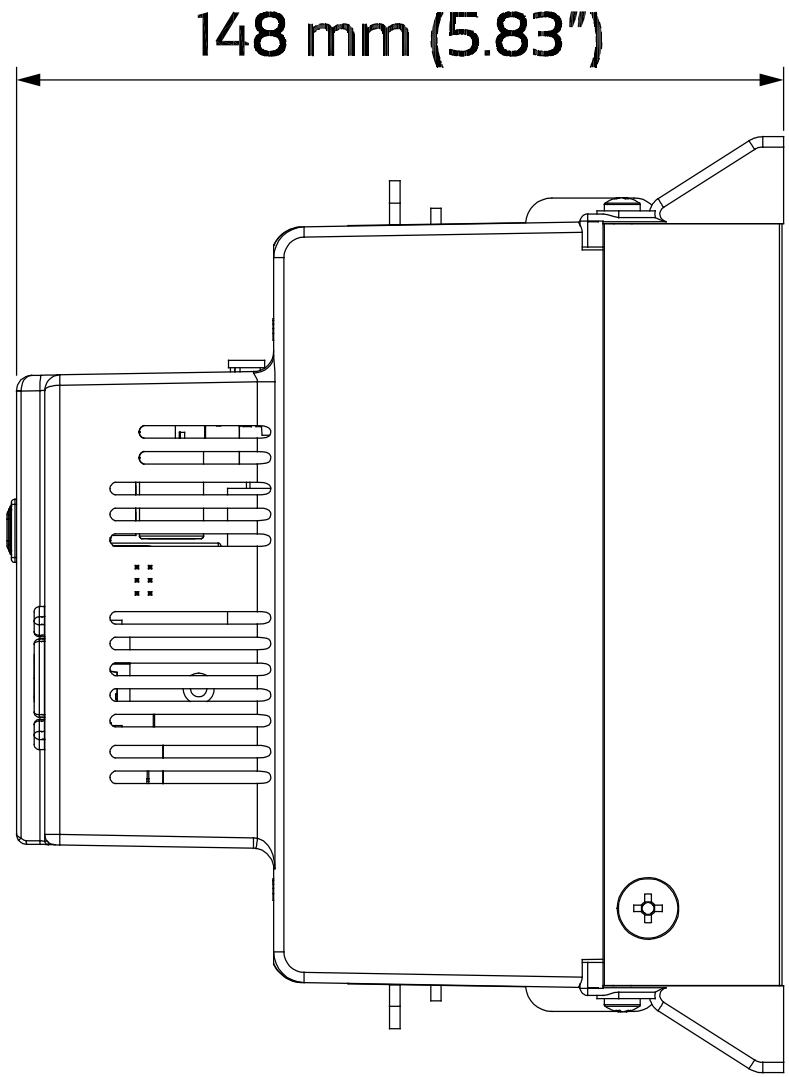
148 mm (5.83")